FITTING INSTRUCTIONS

ACS LED SIGNALLING UNIT

www.definox.com

DEFINOX SAS
3 Rue des Papetiers - Z.A.C. de Tabari 2
44190 Clisson - France
: +33 (0)2 28 03 98 50
: +33 (0)2 28 03 88 00
E-mail: info@definox.com

❶ *Recommendations*

IMPORTANT

When carrying out any repairs or modifications, refer to the maintenance notice (NM-259) available on
http://www.definox.com/

AIR QUALITY

- Dry air and 10µm filter (DIN ISO 8573-1)
- Working pressure: 5 to 7 bar

ELECTRICAL

Cable gland PG11 and PG7 for some versions.

LED terminal module or led multi-voltage module version:

- Operating voltage:
  - Terminal : 24 VDC only _ +/- 5%.
  - Multi-voltage : 24 VAC _ 48 VAC-DC_ +/- 10%.
- Conductor section : 0.5mm² recommended and 0.75mm² max.
- Ø cable : 4.5 to 10 mm.

NOTE ! For the multi-voltage version, the module must be continuously powered, and so a sufficient number of conductors is required in the cable.

Depending on the supply voltage, check the necessary presence or absence of the 2-point wiring jaws between B1 and B2 (see the maintenance manual NM-259).

LED AS-i module version:

- see the maintenance notice (NM-259).

❷ *Disassembling the base from the unit*

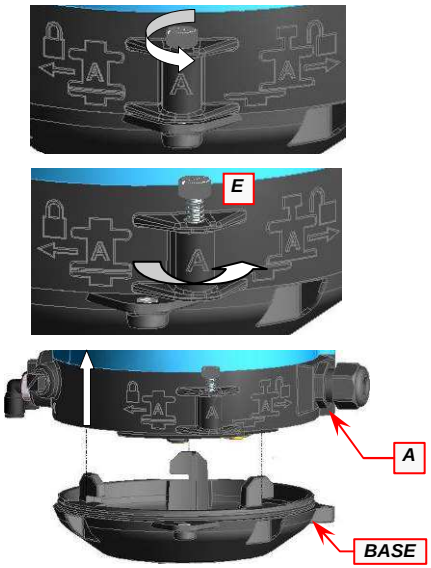

- Unscrew the locking screw [E].
- Turn the connector [A] to unlock it by holding the base in order to release the keying studs.
- Hold the base and pull the connector.

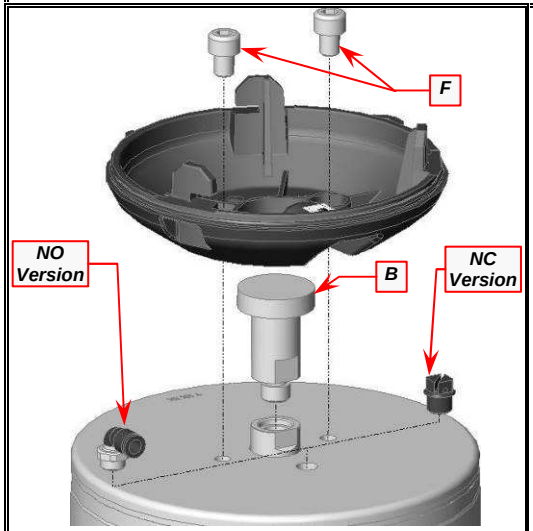

❸ *Mounting the base on the actuator*

- Screw the detection cam [B] and the NO or NC version connector (according to the configuration).
- Position the base on the actuator.
- Insert the two screws [F] and tighten them (tightening torque M8: 1N.m or 10Kgf.cm).

❹ *Mounting the connector on the base*

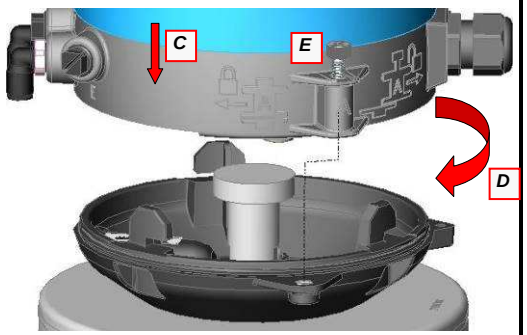

- Position the unit on the base by engaging the 3 keying studs and following the action direction of the arrows [C] then [D].
- Tighten the screw [E] on the base.

❺ *Locking and unlocking the cover*

Cover locked

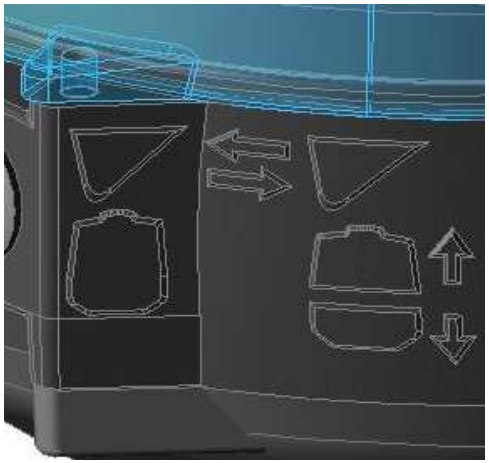

Cover unlocked

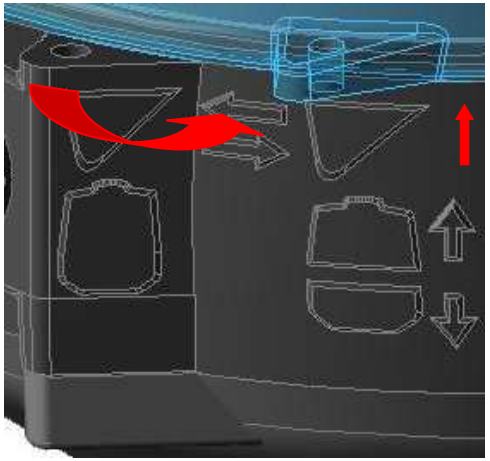

- When the cover is unlocked, it can be removed by lifting it.

6 *Fitting the cable/cable gland*

AS-I module configuration

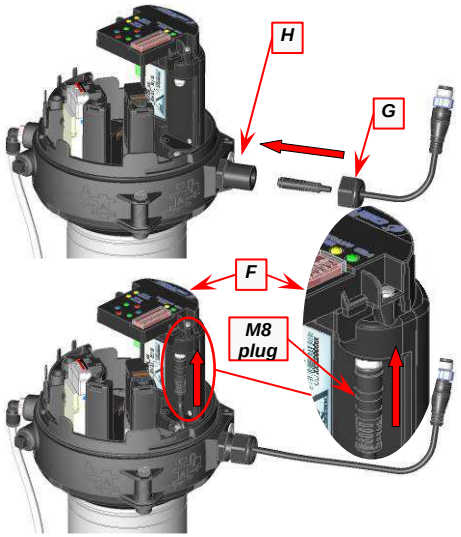

LED terminal or multi-voltage module configuration
(principle valid for version 2E/1S and 4E/3S)

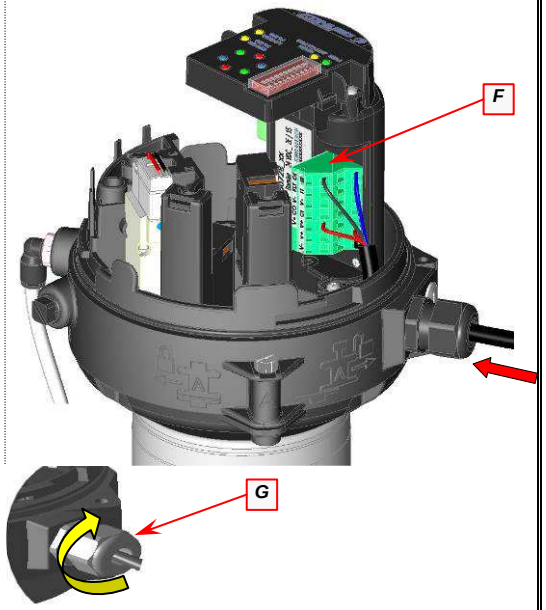

- Unscrew the nut [G] of the cable gland [H].
- Pass the cable (M8 plug) through the nut [G] then through the cable gland [H] to connect it to the led AS-i, terminal or multi-voltage module [F].
- Screw the cap back on [G].

7 *Reassembling the cover*

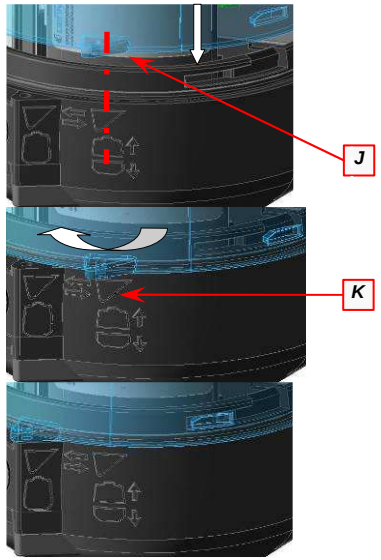

- Align the pin [J] with the pictogram of the pin [K] on the connector.
- Press the cover onto the connector.
- Turn the cover to lock it.

8 *Pneumatic version*

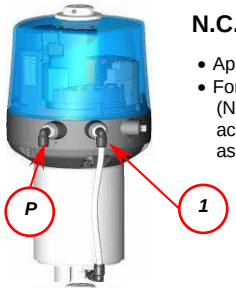

N.C.

- Apply pressure to the channel [P].
- For an actuator operating as N.C. (Normally Closed), connect the actuator to the channel [1] of the unit as shown opposite.

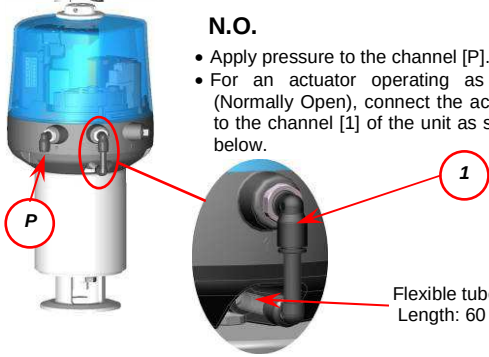

N.O.

- Apply pressure to the channel [P].
- For an actuator operating as N.O. (Normally Open), connect the actuator to the channel [1] of the unit as shown below.

9 *ACS connector version 1EV*

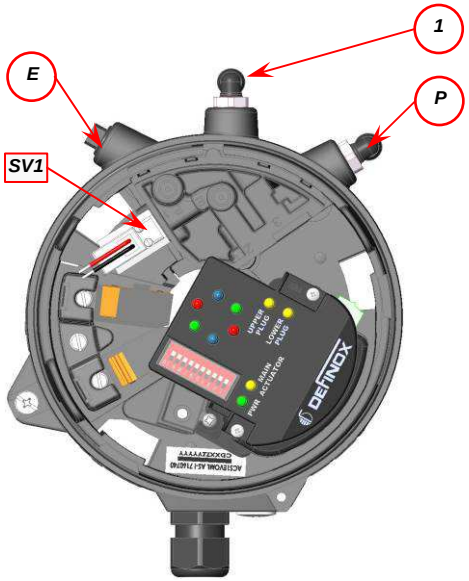

ACS connector version 3EV

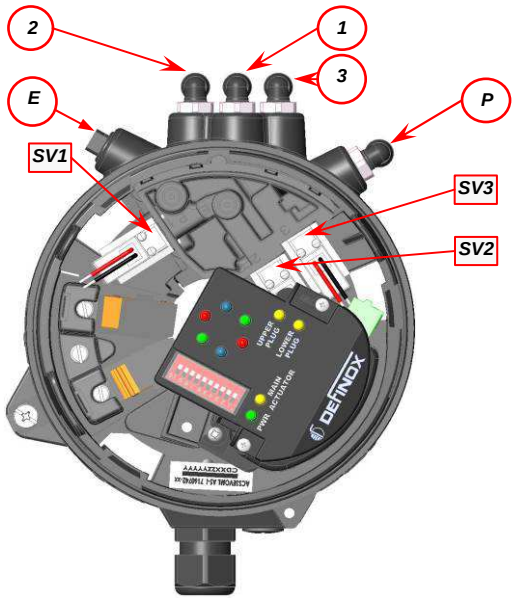

10 *Pneumatic connection table for ACS unit (module or terminal version).*

		VERSION 1 SV		VERSION 3 SV	
		ACS without SV	ACS 1SV	ACS 2SV	ACS 3SV
Pressure	Unit connection		P	P	P
Pierced cap outlet	Unit connection		E	E	E
Main actuator	Unit connection		①	①	①
	Solenoid valve		SV1	SV1	SV1
Upper plug opening	Unit connection			②	②
	Solenoid valve			SV2	SV2
Lower plug opening	Unit connection			②	③
	Solenoid valve			SV2	SV3
1/8" plastic cap		P,①,E		③	③

		VERSION D.E. (Double Effect)
		ACS 1SV
Pressure	Unit connection	P
Pierced cap outlet	Unit connection	E
Actuator – Lower power supply (opening, valve closure)	Unit connection	② ③
	Solenoid valve	SV
Actuator – Upper power supply (additional pressure)	Unit connection	③ ②
	Solenoid valve	SV
Actuator – Central power supply (locking valve closed)	Unit connection	
	Solenoid valve	
Cap	Plastic 1/8 ''	
	Ø 6 - For quick connect	①